VL-1S

3x380-480VAC+N+PE

PCSCHEMATIC Automation

A/S WODSCHOW & Co.
Kirkebjerg Søpark 6
DK-2605 Brøndby, Denmark
www.bearvarimixer.dk

Projekttitel:	**VL-1S**	**Sagsnr.:**		**Projektrev.:**		**Side**	**1**
Kunde:		DCC:				Målestok:	1:1
Sidetitel:	Front	Tegningsnr.:		Siderev.:		Forrige side:	
Filnavn:	31.030-11.03.05_external_use	Konstr. (projekt/side):	CE / CE	Sidst udskrevet:	20-12-2017	Næste side:	2
Sideref.:		Godk. (dato/init):		Sidst rettet:	13-12-2016	Antal sider ialt:	23

VL-1S

Diagramer 1
page 5 - 7

Lists 2
page 8 - 13

Component plan 3
page 14 - 15

PCB diagrammer 4
page 16 - 19

5

6

7

8

9

10

Title	Revision	Last edit	Page
Diagram	02	11-10-2017 07:06:12	4
Diagramer			
Diagram		20-12-2017 09:02:22	5
Diagram		14-12-2016 11:12:44	6
Diagram	02	11-10-2017 07:47:20	7
Lists			
Part list		11-10-2017 08:02:58	8
Component list		11-10-2017 08:04:02	9
Cable list		11-10-2017 08:45:36	11
Comments (log)		20-12-2017 09:03:44	12
Component plan			
Component plan		14-12-2016 09:07:42	14
Component plan		06-09-2017 11:41:44	15
PCB diagrammer			
PCB diagram		13-12-2016 16:31:44	16
PCB diagram		13-12-2016 16:31:32	17
PCB diagram		13-12-2016 16:31:20	18
PCB diagram		13-12-2016 16:31:02	19

Title	Revision	Last edit	Page

PCSCHEMATIC Automation

A/S WODSCHOW & Co.
Kirkebjerg Søpark 6
DK-2605 Brøndby, Denmark
www.bearvarimixer.dk

Project title:	**VL-1S**	**Case no.:**		**Project rev.:**		**Page**	**3**
Customer:		DCC:				Scale:	1:1
Page title:	Table of contents	Dwg. no.:		Page rev.:		Previous page:	2
File name:	31.030-11.03.05_external_use	Eng. (proj/page):	CE / CE	Last print:	20-12-2017	Next page:	4
Page ref.:		Appr. (date/init):		Last edit:	20-12-2017	Total no. of pages:	23

1 2 3 4 5 6 7 8

Documentations Info

This electrical documentation fits on VL-1S
- 3P + N + PE
- ENG version
- CE Approved
- 380VAC - 480VAC

Comments

There will be several variants of charts like this:
- With and without bowl detection
- With and without transformer
- UL or CE approvals

Further, it should be noted that there will be some old versions which will be phase objections along the way, this problem will this be rectified.

Voltage variations

-1F + N, 115V
-1F + N, 200V - 240V
-3F, 200V - 240V
-3F, 380V - 480V
-3F + N, 380V - 480V

Revision descriptions

- Rev. 01 Drawing. no. 03, page 7: Wire transfer of PCBs added
- Rev. 02, Drawing. No. 03, page 7, boiler detection added

Diagramer

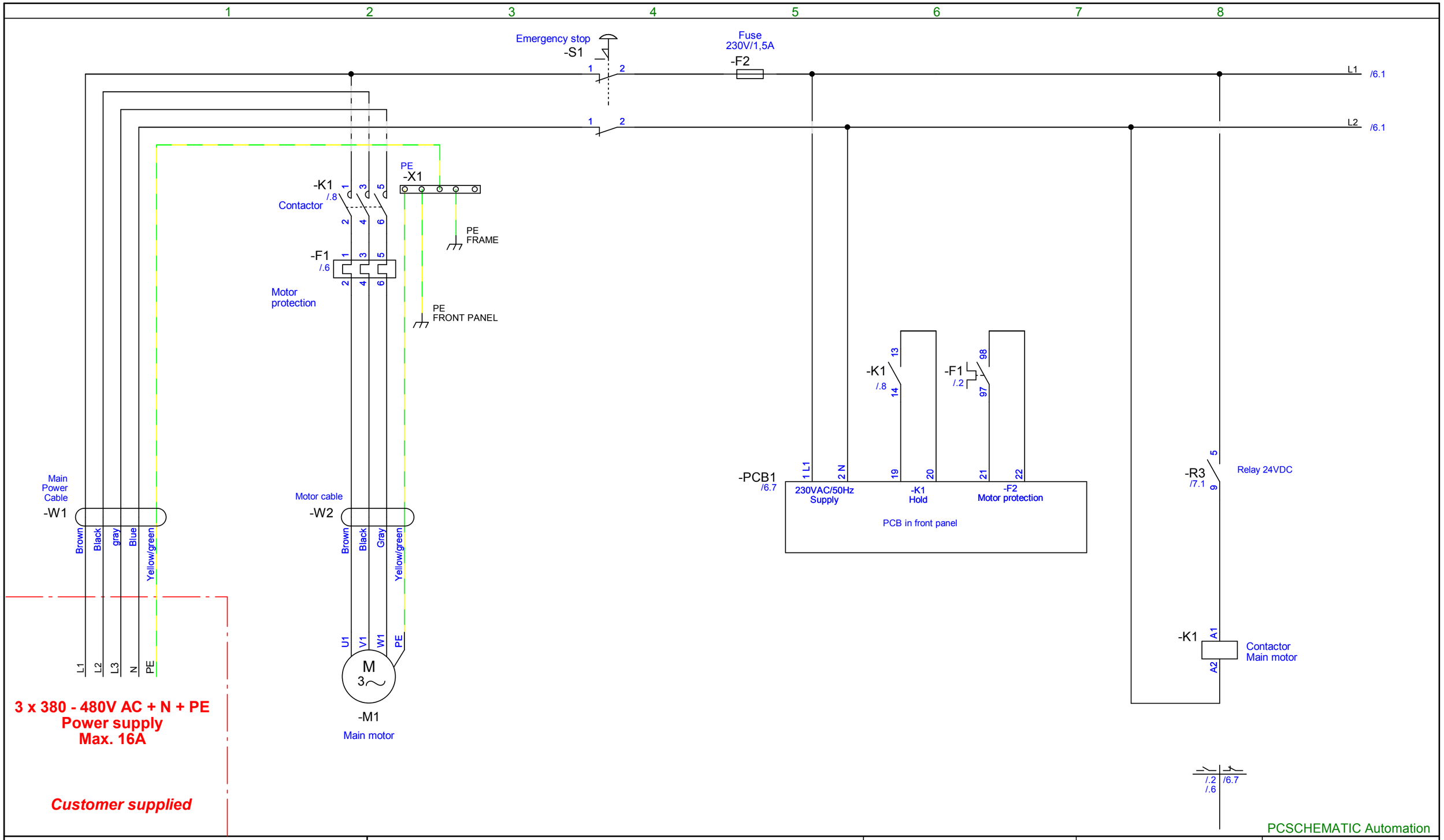

A/S WODSCHOW & Co.
Kirkebjerg Søpark 6
DK-2605 Brøndby, Denmark
www.bearvarimixer.dk

Project title:	**VL-1S**	**Case no.:**		**Project rev.:**		**Page**	**5**
Customer:		DCC:	&FS			Scale:	1:1
Page title:	Diagram	Dwg. no.:	01	Page rev.:		Previous page:	4
File name:	31.030-11.03.05_external_use	Eng. (proj/page):	CE / CE	Last print:	20-12-2017	Next page:	6
Page ref.:		Appr. (date/init):		Last edit:	20-12-2017	Total no. of pages:	23

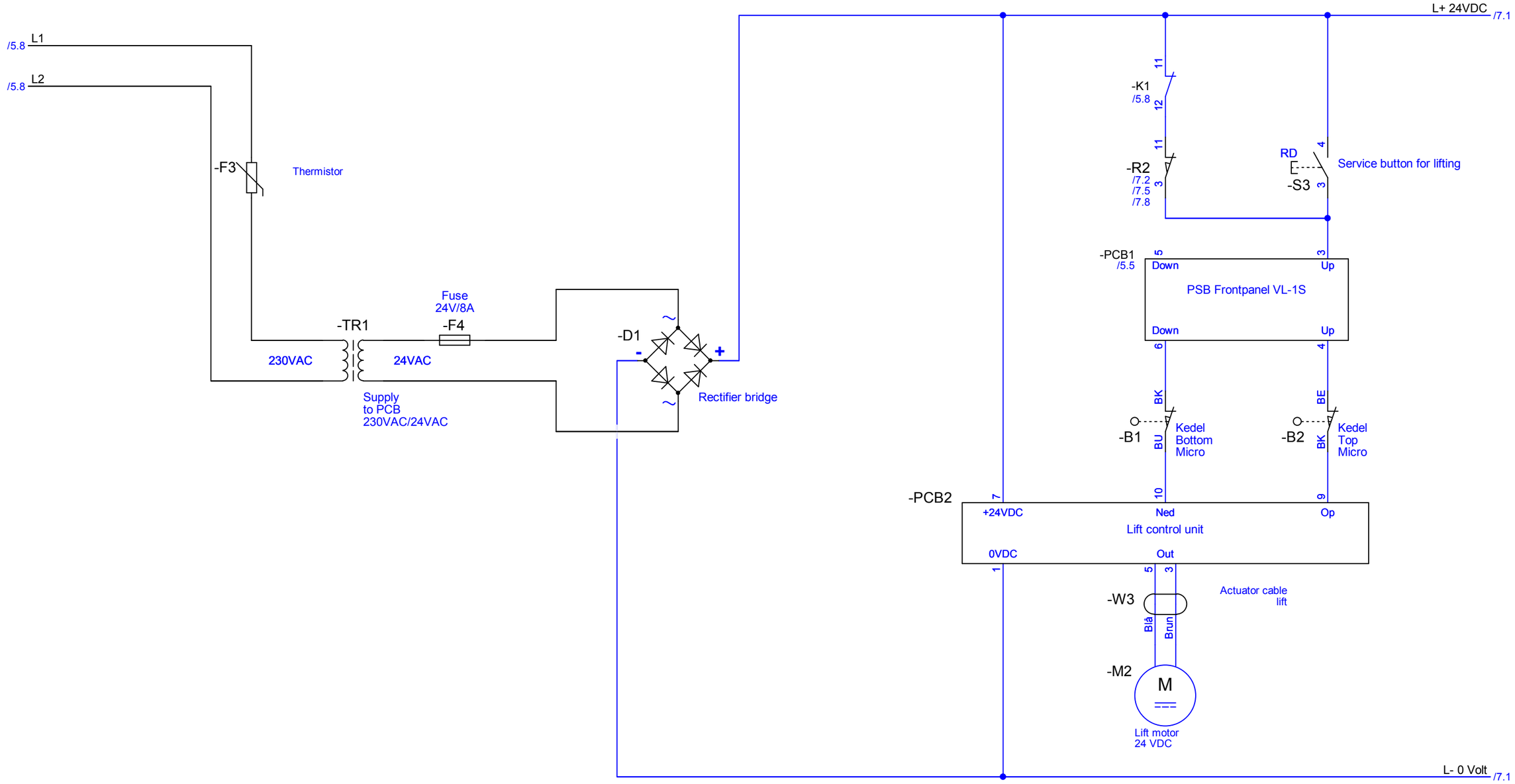

PCSCHEMATIC Automation

A/S WODSCHOW & Co.
Kirkebjerg Søpark 6
DK-2605 Brøndby, Denmark
www.bearvarimixer.dk

Project title:	**VL-1S**	**Case no.:**		**Project rev.:**	**Page** 6
Customer:		DCC:	&FS		Scale: 1:1
Page title:	Diagram	Dwg. no.:	02	Page rev.:	Previous page: 5
File name:	31.030-11.03.05_external_use	Eng. (proj/page):	CE / CE	Last print: 20-12-2017	Next page: 7
Page ref.:		Appr. (date/init):		Last edit: 14-12-2016	Total no. of pages: 23

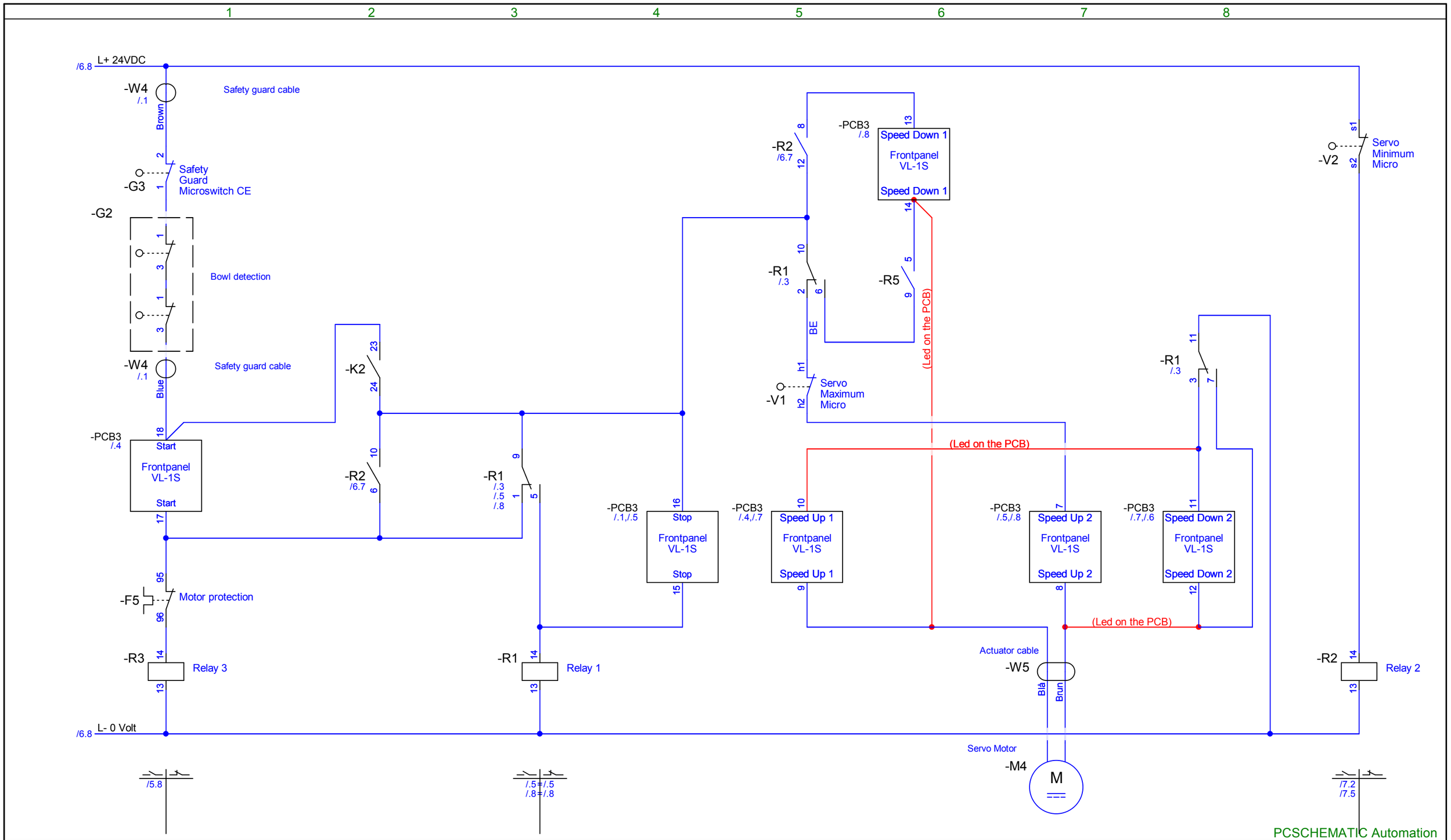

A/S WODSCHOW & Co.
Kirkebjerg Søpark 6
DK-2605 Brøndby, Denmark
www.bearvarimixer.dk

Project title:	**VL-1S**	**Case no.:**		**Project rev.:**		**Page**	**7**
Customer:		DCC:	&FS			Scale:	1:1
Page title:	Diagram	Dwg. no.:	03	Page rev.:	02	Previous page:	6
File name:	31.030-11.03.05_external_use	Eng. (proj/page):	CE / CE	Last print:	20-12-2017	Next page:	8
Page ref.:		Appr. (date/init):		Last edit:	20-12-2017	Total no. of pages:	23

Lists

Article no.	Type	Quantity
		4
56CR10-111M	Kedel detektering	1
56P30-15.4	Safety guard Microswitch CE	1
56SN20-30	Microswitch til servomotor	2
-	Thermistor	1
AR30-86.2	Lift motor 24VDC (actuator)	1
AR30-194.22M	Aktuator kabel, løft, 0,6m	-
AR30-194.23M	Actuatorkabel, løft, 1,2m	-
AR30-423.1	Relæ 24VDC, 4 polet	2
AR30-425	Løfte kontrol unit	1
AR30-517	Servo motor Hastighed 24VDC (aktuator)	1
AR31-174.14	Emergency stop NC	1
AR31-174.19	Mini trykknap NO (service)	1
AR31-193M	Safety guard cable	-
AR31-458	PE	1
AR31-530.6M	Front panel VL-1S	1
AR61-522	CE micro	2
AR140E-420	Relay 24VDC	1
R20-88.5	Contactor main motor CI9	1
R20-88.11	Thermorelay TI16	1
R20-88.44	Hjælpe kontakt NO	1
R20E-418.2	Fuse 230V/1,5A	1
R20E-418.8	Fuse 24V/8A	1
R30-85.1	Main motor 3F, 1kW (CE)	1
R60E-430.1	Transformer P:230/S:24 incl. Thermistor	1
R150E-425	Rectifier bridge	1
RN30-194.9M	Motor Cable	-
RN30-194.M	Main Power Cable, 4F (CE)	-

Article no.	Type	Quantity

PCSCHEMATIC Automation

A/S WODSCHOW & Co.
Kirkebjerg Søpark 6
DK-2605 Brøndby, Denmark
www.bearvarimixer.dk

Project title: VL-1S		Case no.:		Project rev.:	Page 8
Customer:		DCC:	&PB		Scale: 1:1
Page title:	Part list	Dwg. no.:		Page rev.:	Previous page: 7
File name:	31.030-11.03.05_external_use	Eng. (proj/page):	CE / CE	Last print: 20-12-2017	Next page: 9
Page ref.:		Appr. (date/init):		Last edit: 11-10-2017	Total no. of pages: 23

Component	Article	Type	Description	Position
-B1	AR61-522	CE micro		/6.7
-B2	AR61-522	CE micro		/6.8
-D1	R150E-425	Rectifier bridge		/6.4
-F1	R20-88.11	Thermorelay TI16		/5.2
-F2	R20E-418.2	Fuse 230V/1,5A		/5.5
-F3	-	Thermistor		/6.1
-F4	R20E-418.8	Fuse 24V/8A		/6.3
-F5				/7.1
-G2	56CR10-111M	Kedel detektering		/7.1
-G3	56P30-15.4	Safety guard Microswitch CE		/7.1
-K1	R20-88.5	Contactor main motor CI9		/5.2
-K1	R20-88.44	Hjælpe kontakt NO		/5.6
-K2				/7.2
-M1	R30-85.1	Main motor 3F, 1kW (CE)		/5.2
-M2	AR30-86.2	Lift motor 24VDC (actuator)		/6.7
-M4	AR30-517	Servo motor Hastighed 24VDC (aktuator)		/7.7
-PCB1	AR31-530.6M	Front panel VL-1S		/5.5
-PCB2	AR30-425	Løfte kontrol unit		/6.7
-PCB3				/7.6
-R1	AR30-423.1	Relæ 24VDC, 4 polet		/7.3
-R2	AR30-423.1	Relæ 24VDC, 4 polet		/6.7
-R3	AR140E-420	Relay 24VDC		/5.8
-R5				/7.6
-S1	AR31-174.14	Emergency stop NC		/5.4
-S3	AR31-174.19	Mini trykknap NO (service)		/6.8
-TR1	R60E-430.1	Transformer P:230/S:24 incl. Thermistor		/6.2
-V1	56SN20-30	Microswitch til servomotor		/7.5
-V2	56SN20-30	Microswitch til servomotor		/7.8

A/S WODSCHOW & Co.
Kirkebjerg Søpark 6
DK-2605 Brøndby, Denmark
www.bearvarimixer.dk

Project title:	**VL-1S**	**Case no.:**		**Project rev.:**		**Page**	**9**
Customer:		DCC:	&PD			Scale:	1:1
Page title:	Component list	Dwg. no.:		Page rev.:		Previous page:	8
File name:	31.030-11.03.05_external_use	Eng. (proj/page):	CE / CE	Last print:	20-12-2017	Next page:	10
Page ref.:		Appr. (date/init):		Last edit:	11-10-2017	Total no. of pages:	23

Component	Article	Type	Description	Position
-W1	RN30-194.M	Main Power Cable, 4F (CE)		/5.1
-W2	RN30-194.9M	Motor Cable		/5.2
-W3	AR30-194.22M	Aktuator kabel, løft, 0,6m		/6.7
-W4	AR31-193M	Safety guard cable		/7.1
-W5	AR30-194.23M	Actuatorkabel, løft, 1,2m		/7.7
-X1	AR31-458	PE		/5.2

PCSCHEMATIC Automation

A/S WODSCHOW & Co.
Kirkebjerg Søpark 6
DK-2605 Brøndby, Denmark
www.bearvarimixer.dk

Project title:	VL-1S	Case no.:		Project rev.:		Page	10
Customer:		DCC:	&PD			Scale:	1:1
Page title:	Component list	Dwg. no.:		Page rev.:		Previous page:	9
File name:	31.030-11.03.05_external_use	Eng. (proj/page):	CE / CE	Last print:	20-12-2017	Next page:	11
Page ref.:		Appr. (date/init):		Last edit:	11-10-2017	Total no. of pages:	23

From			Cable		To			Type
-K1	3	/5.2	**-W1**	Black	-S1	2	/5.4	Main Power Cable, 4F (CE)
-S1	1	/5.4	**-W1**	Blue				Main Power Cable, 4F (CE)
-S1	1	/5.4	**-W1**	Brown	-R3	5	/5.8	Main Power Cable, 4F (CE)
-X1		/5.3	**-W1**	Yellow/green				Main Power Cable, 4F (CE)
-K1	5	/5.2	**-W1**	gray				Main Power Cable, 4F (CE)
-F1	4	/5.2	**-W2**	Black	-M1	V1	/5.2	Motor Cable
-F1	2	/5.2	**-W2**	Brown	-M1	U1	/5.2	Motor Cable
-F1	6	/5.2	**-W2**	Gray	-M1	W1	/5.2	Motor Cable
-X1		/5.2	**-W2**	Yellow/green	-M1	PE	/5.2	Motor Cable
-PCB2	5	/6.7	**-W3**	Blå	-M2		/6.7	Aktuator kabel, løft, 0,6m
-PCB2	3	/6.7	**-W3**	Brun	-M2		/6.7	Aktuator kabel, løft, 0,6m
-G1	3	/7.1	**-W4**	Blue	-K2	23	/7.2	Safety guard cable
-V2	s1	/7.8	**-W4**	Brown	-G3	2	/7.1	Safety guard cable
-PCB3	14	/7.6	**-W5**	Blå	-M4		/7.7	Actuatorkabel, løft, 1,2m
-PCB3	12	/7.8	**-W5**	Brun	-M4		/7.7	Actuatorkabel, løft, 1,2m

Page no.	Titlel	Page remarks	Revision	Last edit
1	Front			13-12-2016
2	Index			11-10-2017
3	Table of contents			20-12-2017
4	Diagram		02	11-10-2017
	Diagramer			
5	Diagram			20-12-2017
6	Diagram			14-12-2016
7	Diagram		02	11-10-2017
	Lists			
8	Part list			11-10-2017
9	Component list			11-10-2017
11	Cable list			11-10-2017
12	Comments (log)			20-12-2017
	Component plan			

Page no.	Titlel	Page remarks	Revision	Last edit
14	Component plan			14-12-2016
15	Component plan			06-09-2017
	PCB diagrammer			
16	PCB diagram			13-12-2016
17	PCB diagram			13-12-2016
18	PCB diagram			13-12-2016
19	PCB diagram			13-12-2016

Component plan

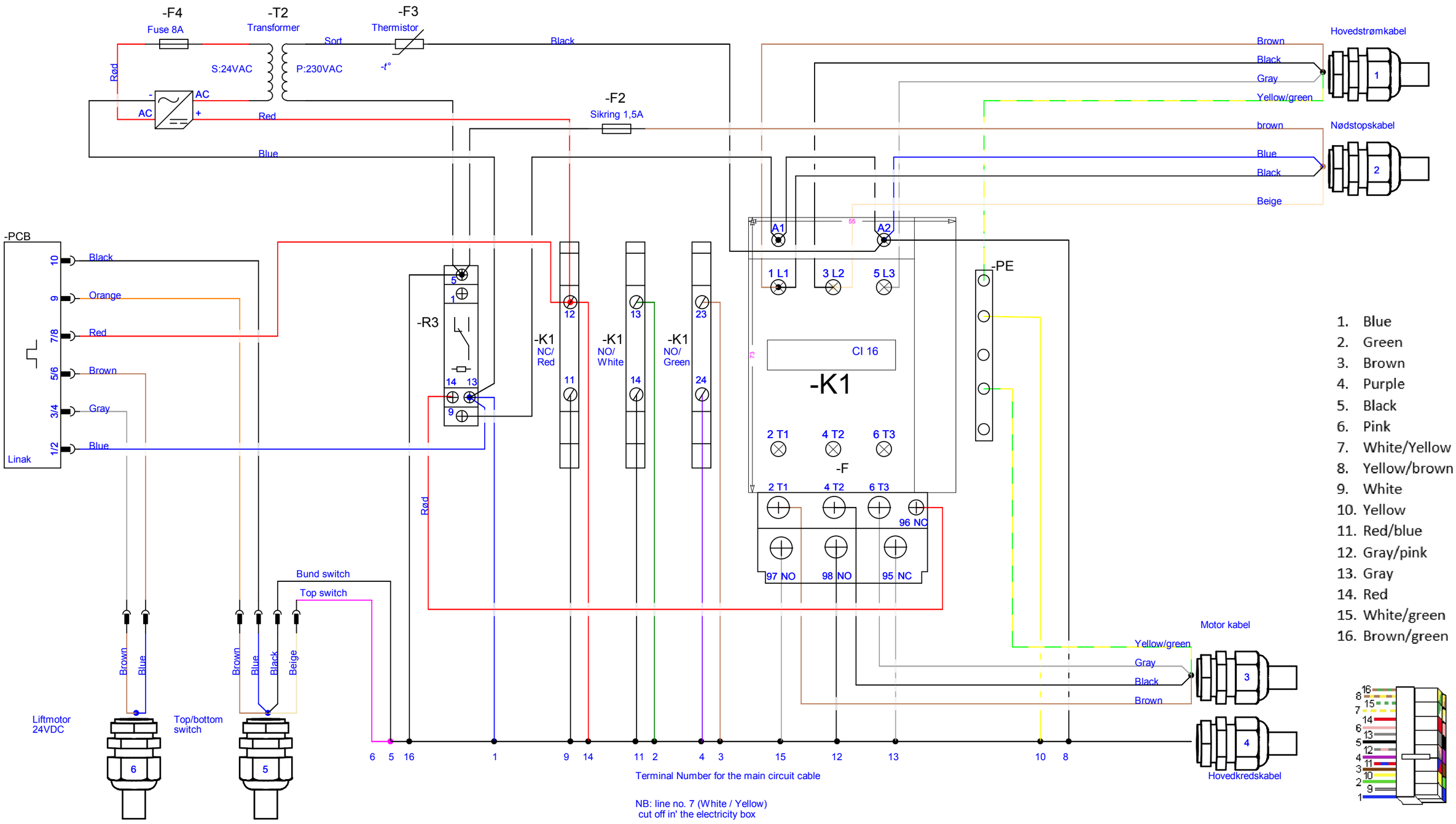

PCSCHEMATIC Automation

A/S WODSCHOW & Co.
Kirkebjerg Søpark 6
DK-2605 Brøndby, Denmark
www.bearvarimixer.dk

Projekttitel:	**VL-1S**	**Sagsnr.:**		**Projektrev.:**	**Side** 14
Kunde:		DCC:	&FS		Målestok: 1:1
Sidetitel:	Component plan	Tegningsnr.:	04	Siderev.:	Forrige side: 13
Filnavn:	31.030-11.03.05_external_use	Konstr. (projekt/side):	CE / CE	Sidst udskrevet: 20-12-2017	Næste side: 15
Sideref.:		Godk. (dato/init):		Sidst rettet: 14-12-2016	Antal sider ialt: 23

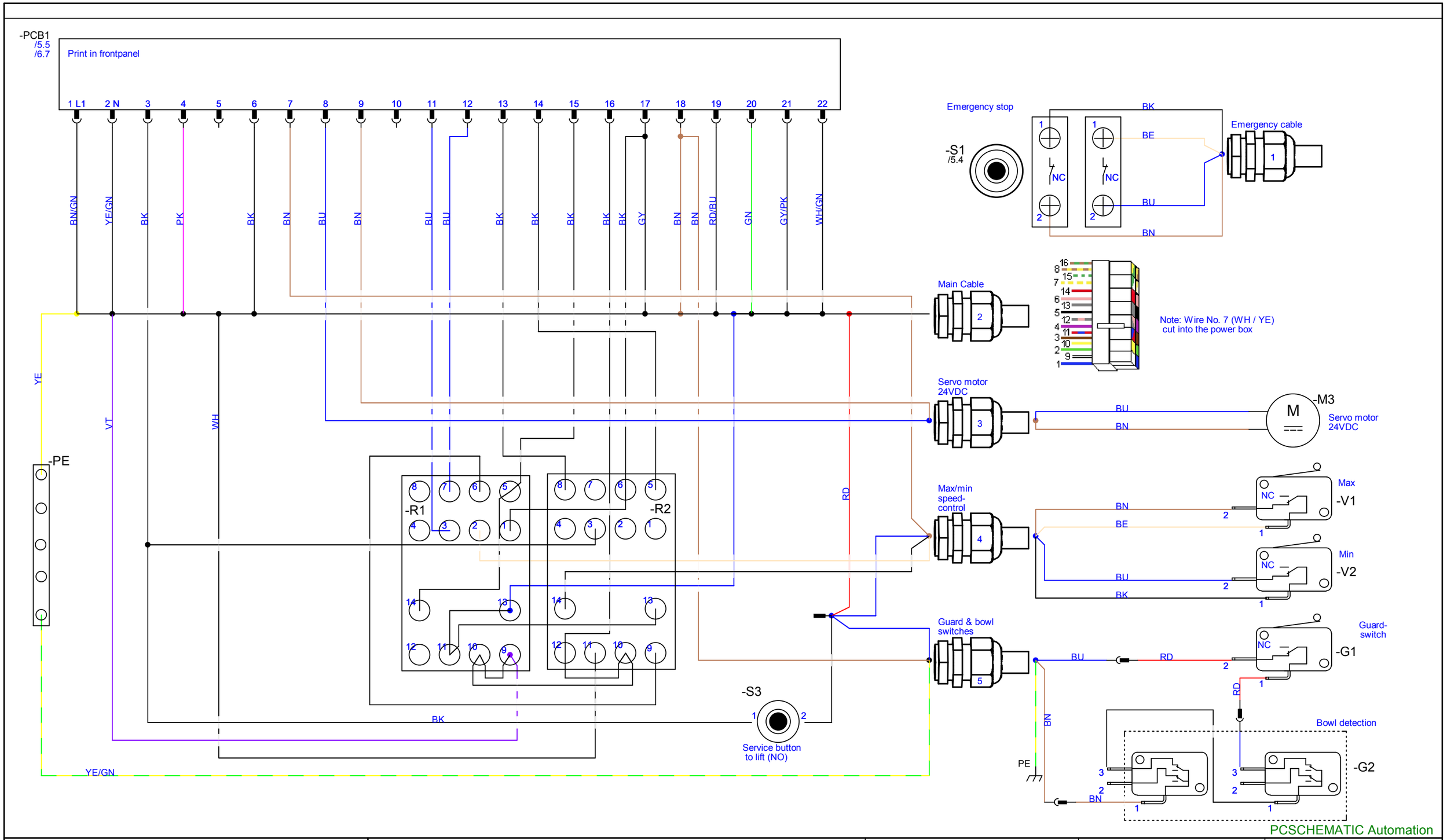

PCSCHEMATIC Automation

A/S WODSCHOW & Co. Kirkebjerg Søpark 6 DK-2605 Brøndby, Denmark www.bearvarimixer.dk	**Project title:** VL-1S	**Case no.:**	**Project rev.:**	**Page**	15
	Customer:	DCC: &FS		Scale:	1:1
	Page title: Component plan	Dwg. no.: 05	Page rev.:	Previous page:	14
	File name: 31.030-11.03.05_external_use	Eng. (proj/page): CE / CE	Last print: 20-12-2017	Next page:	16
	Page ref.:	Appr. (date/init):	Last edit: 06-09-2017	Total no. of pages:	23