Kodiak VL1C

PCSCHEMATIC Automation

A/S WODSCHOW & Co.
Kirkebjerg Søpark 6
DK-2605 Brøndby, Denmark
www.bearvarimixer.dk

Project title:	**Kodiak VL1C**	**Case no.:**		**Project rev.:**		**Page**	**1**
Customer:		DCC:				Scale:	1:1
Page title:	Main page	Dwg. no.:		Page rev.:		Previous page:	
File name:	37.020-13.02.01	Eng. (proj/page):	CE	Last print:	29-08-2018	Next page:	2
Page ref.:		Appr. (date/init):		Last edit:	22-01-2018	Total no. of pages:	14

Kodiak VL1C

Diagrams 1
page 5 - 5

Lists 2
page 6 - 9

Assembly instructions 3
page 10 - 11

4

5

6

7

8

9

10

Title	Revision	Last edit	Page
Documentation Info		29-08-2018 09:35:52	4
Diagrams			
Diagram		29-08-2018 07:54:16	5
Lists			
Styk liste		29-08-2018 07:54:18	6
Komponent liste		29-08-2018 07:54:18	7
Kabel liste		25-01-2018 07:29:24	8
Assembly instructions			
Assembly freqvency converter box		25-01-2018 08:12:42	10
Assembly freqvency converter box		25-01-2018 07:30:12	11

Title	Revision	Last edit	Page

PCSCHEMATIC Automation

A/S WODSCHOW & Co.
Kirkebjerg Søpark 6
DK-2605 Brøndby, Denmark
www.bearvarimixer.dk

Project title: Kodiak VL1C	**Case no.:**	**Project rev.:**	**Page** 3
Customer:	DCC:		Scale: 1:1
Page title: Table of contents	Dwg. no.:	Page rev.:	Previous page: 2
File name: 37.020-13.02.01	Eng. (proj/page): CE	Last print: 29-08-2018	Next page: 4
Page ref.:	Appr. (date/init):	Last edit: 29-08-2018	Total no. of pages: 14

1 2 3 4 5 6 7 8

Documentation Info
Control for KODIAK 20 L VL-1C
- CE approved
- 1P + N
- 200VAC - 240VAC

Comments
There will be several variants of charts like this:
- With and without bowl detection
- With and without transformer
- UL or CE approvals

Voltage variations
-1F + N, 115V
-1F + N, 200V - 240V

Revision descriptions

PCSCHEMATIC Automation

A/S WODSCHOW & Co.
Kirkebjerg Søpark 6
DK-2605 Brøndby, Denmark
www.bearvarimixer.dk

Project title:	**Kodiak VL1C**	**Case no.:**		**Project rev.:**		**Page**	**4**
Customer:		DCC:				Scale:	1:1
Page title:	Documentation Info	Dwg. no.:		Page rev.:		Previous page:	3
File name:	37.020-13.02.01	Eng. (proj/page):	CE	Last print:	29-08-2018	Next page:	5
Page ref.:		Appr. (date/init):		Last edit:	29-08-2018	Total no. of pages:	14

Diagrams

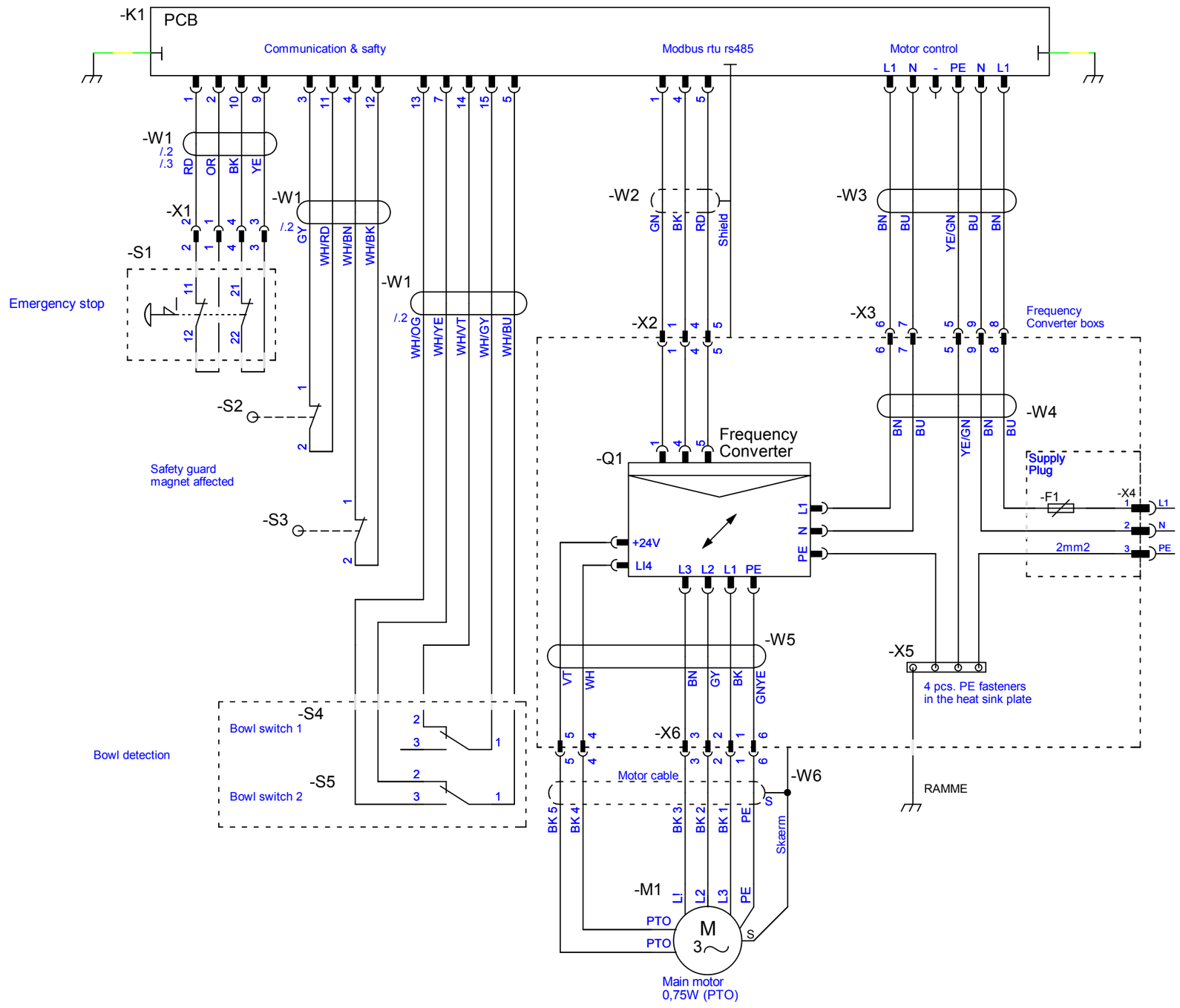

PCSCHEMATIC Automation

A/S WODSCHOW & Co. Kirkebjerg Søpark 6 DK-2605 Brøndby, Denmark www.bearvarimixer.dk	**Project title:** **Kodiak VL1C**	**Case no.:**	**Project rev.:**	**Page**	**5**
	Customer:	DCC: &FS		Scale:	1:1
	Page title: Diagram	Dwg. no.: 01	Page rev.:	Previous page:	4
	File name: 37.020-13.02.01	Eng. (proj/page): CE / CE	Last print: 29-08-2018	Next page:	6
	Page ref.:	Appr. (date/init):	Last edit: 29-08-2018	Total no. of pages:	14

Lists

Varenummer	Type	Mængde
		2
56CR10-111M	Switch kedeldetektering	1
56RN20-110.4M	Kedel detektering	2
-	Attaching the heat sink	18
CR10-174.11	Nødstop NC	1
CR10-194.10	RJ45	1
CR10-601.5	Frequency Converter ATV12	1
CR10-601.9	Frequency Converter ATV12	1
CR20-194.26M	Security cable input	-
CR20-194.27M	Frequency Converter output	-
CR20-501	Control PCB	1
CR20-542	Main cable	-
CR20-543	Motor control	-
CR30-85	Main motor 0,75 kW	1
R20E-410.9	MLX connector 50-84-2090 (9P-female)	1
R20E-410.16	MLX connector 50-84-2060 (6P-female)	1
R20E-418.9	Sikring 250V/10A	1
STA3162		1

Varenummer	Type	Mængde

PCSCHEMATIC Automation

A/S WODSCHOW & Co.
Kirkebjerg Søpark 6
DK-2605 Brøndby, Denmark
www.bearvarimixer.dk

Projekttitel:	Kodiak VL1C	Sagsnr.:		Projektrev.:	Side 6
Kunde:		DCC:	&PB		Målestok: 1:1
Sidetitel:	Styk liste	Tegningsnr.:		Siderev.:	Forrige side: 5
Filnavn:	37.020-13.02.01	Konstr. (projekt/side):	CE / CE	Sidst udskrevet: 29-08-2018	Næste side: 7
Sideref.:		Godk. (dato/init):		Sidst rettet: 29-08-2018	Antal sider ialt: 14

Komponent	Varenr.	Type	Beskrivelse	Placering
				/10.1
	STA3162			/10.3
-F1	R20E-418.9	Sikring 250V/10A		/5.6
-K1	CR20-501	Control PCB		/5.2
-M1	CR30-85	Main motor 0,75 kW		/5.5
-Q1	CR10-601.5	Frequency Converter ATV12		/10.5
-Q1	CR10-601.9	Frequency Converter ATV12		/5.5
-S1	CR10-174.11	Nødstop NC		/5.2
-S2	56RN20-110.4M	Kedel detektering		/5.2
-S3	56RN20-110.4M	Sikkerheds switch		/5.3
-S4	56CR10-111M	Switch kedeldetektering		/5.3
-S5				/11.8
-W1	CR20-542	Main cable		/5.2
-W1	CR20-542	Main cable		/5.2
-W2	CR10-194.10	Modbus rtu rs485		/5.4
-W3	CR20-543	Motor control		/5.5
-W4	CR20-194.26M	Security cable input		/5.6
-W5	CR20-194.27M	Frequency Converter output		/5.5
-W6	-	Motor cable		/5.4
-X1	-	Molex plug		/5.2
-X2	-	Molex plug		/5.4
-X2	CR10-194.10	RJ45		/10.6
-X3	-	Molex plug		/5.6
-X3	R20E-410.9	MLX connector 50-84-2090 (9P-female)		/10.3
-X5	-	Attaching the heat sink		/5.6
-X6	-	Molex plug		/5.4
-X6	R20E-410.16	MLX connector 50-84-2060 (6P-female)		/10.8

Fra			Kabel		Til			Type
-K1	10	/5.2	**-W1**	BK	-X1	4	/5.2	Main cable
-K1	2	/5.2	**-W1**	OR	-X1	1	/5.2	Main cable
-K1	1	/5.2	**-W1**	RD	-X1	2	/5.2	Main cable
-K1	9	/5.2	**-W1**	YE	-X1	3	/5.2	Main cable
-K1	3	/5.2	**-W1**	GY	-S2	1	/5.2	Main cable
-K1	12	/5.3	**-W1**	WH/BK	-S3	2	/5.3	Main cable
-K1	4	/5.3	**-W1**	WH/BN	-S3	1	/5.3	Main cable
-K1	11	/5.2	**-W1**	WH/RD	-S2	2	/5.2	Main cable
-K1	5	/5.3	**-W1**	WH/BU	-S5	1	/5.3	Main cable
-K1	15	/5.3	**-W1**	WH/GY	-S4	1	/5.3	Main cable
-K1	13	/5.3	**-W1**	WH/OG	-S5	3	/5.3	Main cable
-K1	14	/5.3	**-W1**	WH/VT	-S4	2	/5.3	Main cable
-K1	7	/5.3	**-W1**	WH/YE	-S5	2	/5.3	Main cable
-K1	4	/5.4	**-W2**	BK	-X2	4	/5.4	Modbus rtu rs485
-K1	1	/5.4	**-W2**	GN	-X2	1	/5.4	Modbus rtu rs485
-K1	5	/5.5	**-W2**	RD	-X2	5	/5.5	Modbus rtu rs485
			-W2	Shield				Modbus rtu rs485
			-W3					Motor control
-K1		/5.6	**-W3**	BN	-X3	6	/5.6	Motor control
-K1		/5.6	**-W3**	BN	-X3	8	/5.6	Motor control
-K1		/5.6	**-W3**	BU	-X3	9	/5.6	Motor control
-K1		/5.6	**-W3**	BU	-X3	7	/5.6	Motor control
-K1		/5.6	**-W3**	YE/GN	-X3	5	/5.6	Motor control
-X4	2	/5.7	**-W4**	BN	-X3	9	/5.6	Security cable input
-Q1		/5.5	**-W4**	BN	-X3	6	/5.6	Security cable input

Fra			Kabel		Til			Type
-F1		/5.6	**-W4**	BU	-X3	8	/5.6	Security cable input
-Q1		/5.5	**-W4**	BU	-X3	7	/5.6	Security cable input
-X5		/5.6	**-W4**	YE/GN	-X3	5	/5.6	Security cable input
-Q1		/5.5	**-W5**	BK	-X6	1	/5.5	Frequency Converter output
-Q1		/5.4	**-W5**	BN	-X6	3	/5.4	Frequency Converter output
-Q1		/5.5	**-W5**	GNYE	-X6	6	/5.5	Frequency Converter output
-Q1		/5.5	**-W5**	GY	-X6	2	/5.5	Frequency Converter output
-Q1		/5.4	**-W5**	VT	-X6	5	/5.4	Frequency Converter output
-Q1		/5.4	**-W5**	WH	-X6	4	/5.4	Frequency Converter output
-X6	1	/5.5	**-W6**	BK 1	-M1	L3	/5.5	Motor cable
-X6	2	/5.5	**-W6**	BK 2	-M1	L2	/5.5	Motor cable
-X6	3	/5.4	**-W6**	BK 3	-M1	L!	/5.4	Motor cable
-X6	4	/5.4	**-W6**	BK 4	-M1	PTO	/5.4	Motor cable
-X6	5	/5.4	**-W6**	BK 5	-M1	PTO	/5.4	Motor cable
-X6	6	/5.5	**-W6**	PE	-M1	PE	/5.5	Motor cable
			-W6	S				Motor cable

PCSCHEMATIC Automation

A/S WODSCHOW & Co.
Kirkebjerg Søpark 6
DK-2605 Brøndby, Denmark
www.bearvarimixer.dk

Projekttitel:	**Kodiak VL1C**	**Sagsnr.:**		**Projektrev.:**	**Side** 9
Kunde:		DCC:			Målestok: 1:1
Sidetitel:	Kabel liste	Tegningsnr.:	06	Siderev.:	Forrige side: 8
Filnavn:	37.020-13.02.01	Konstr. (projekt/side):	CE / CE	Sidst udskrevet: 29-08-2018	Næste side: 10
Sideref.:		Godk. (dato/init):		Sidst rettet: 25-01-2018	Antal sider ialt: 14

Assembly instructions

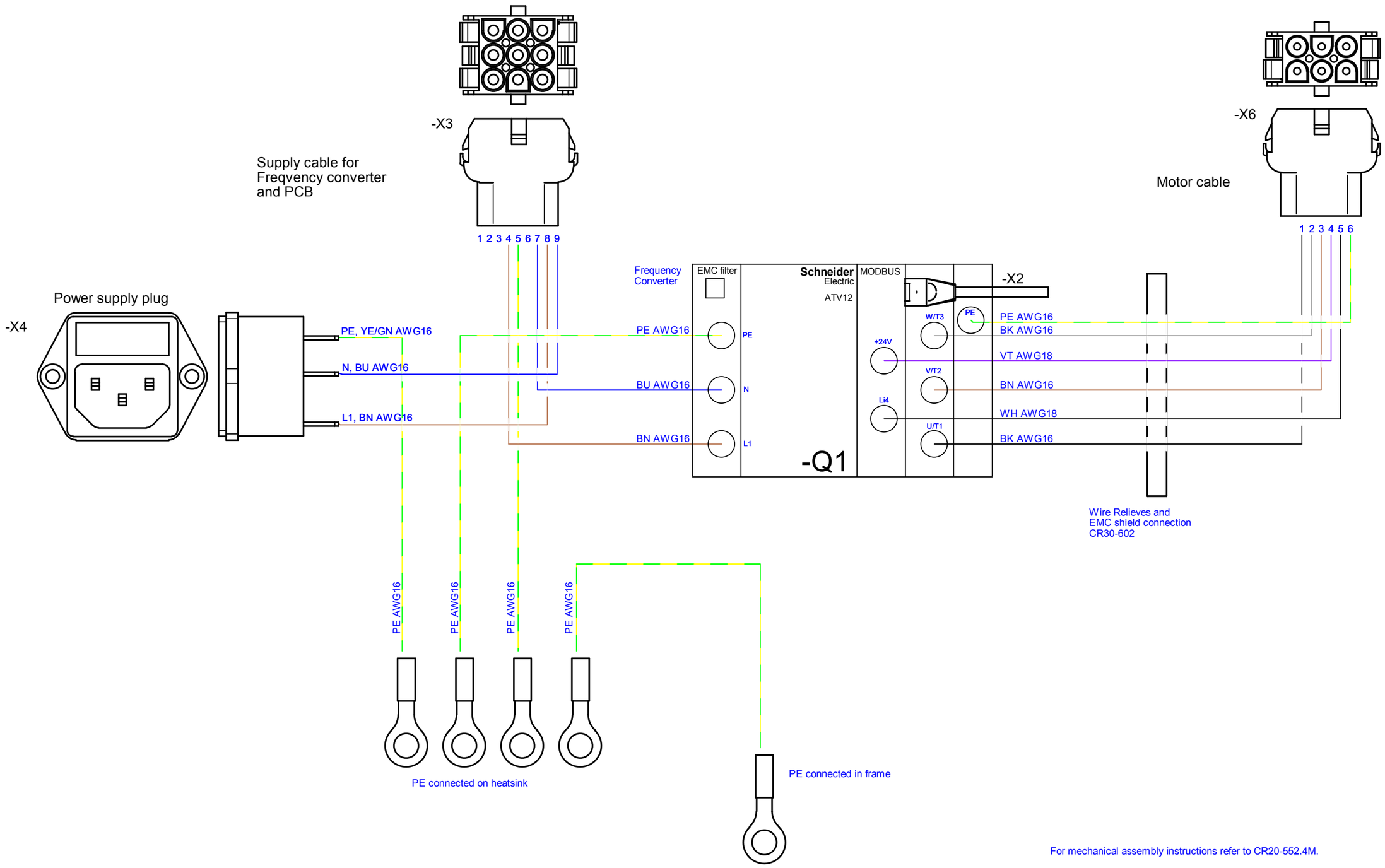

For mechanical assembly instructions refer to CR20-552.4M.

PCSCHEMATIC Automation

A/S WODSCHOW & Co.
Kirkebjerg Søpark 6
DK-2605 Brøndby, Denmark
www.bearvarimixer.dk

Project title:	**Kodiak VL1C**	**Case no.:**		**Project rev.:**		**Page**	**10**
Customer:		DCC:	&FS			Scale:	1:1
Page title:	Assembly freqvency converter box	Dwg. no.:	02	Page rev.:		Previous page:	9
File name:	37.020-13.02.01	Eng. (proj/page):	CE / CE	Last print:	29-08-2018	Next page:	11
Page ref.:		Appr. (date/init):		Last edit:	25-01-2018	Total no. of pages:	14

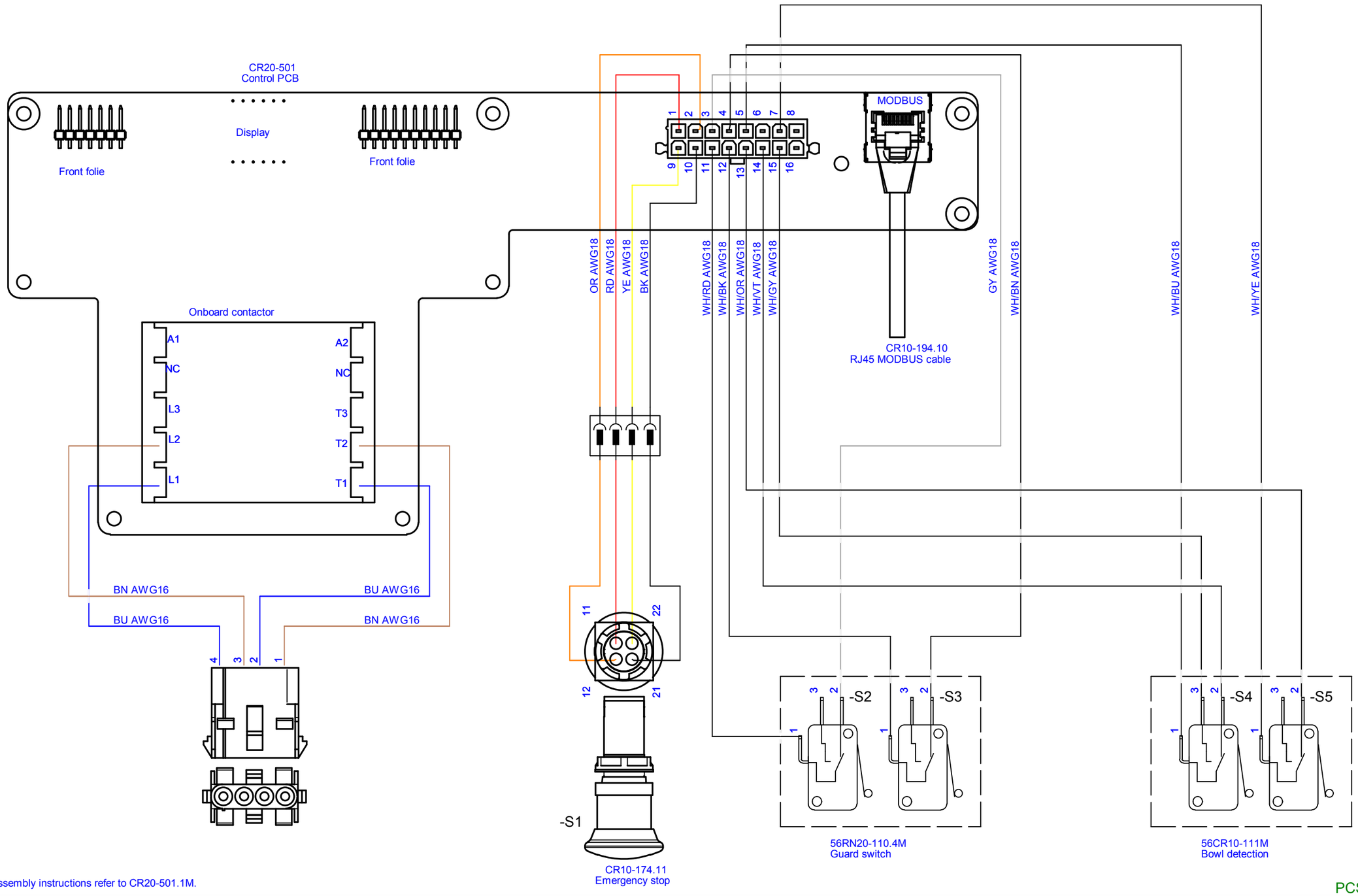

For mechanical assembly instructions refer to CR20-501.1M.

PCSCHEMATIC Automation

A/S WODSCHOW & Co.
Kirkebjerg Søpark 6
DK-2605 Brøndby, Denmark
www.bearvarimixer.dk

Project title:	**Kodiak VL1C**	**Case no.:**		**Project rev.:**		**Page**	**11**
Customer:		DCC:	&FS			Scale:	1:1
Page title:	Assembly freqvency converter box	Dwg. no.:	02	Page rev.:		Previous page:	10
File name:	37.020-13.02.01	Eng. (proj/page):	CE / CE	Last print:	29-08-2018	Next page:	
Page ref.:		Appr. (date/init):		Last edit:	25-01-2018	Total no. of pages:	14